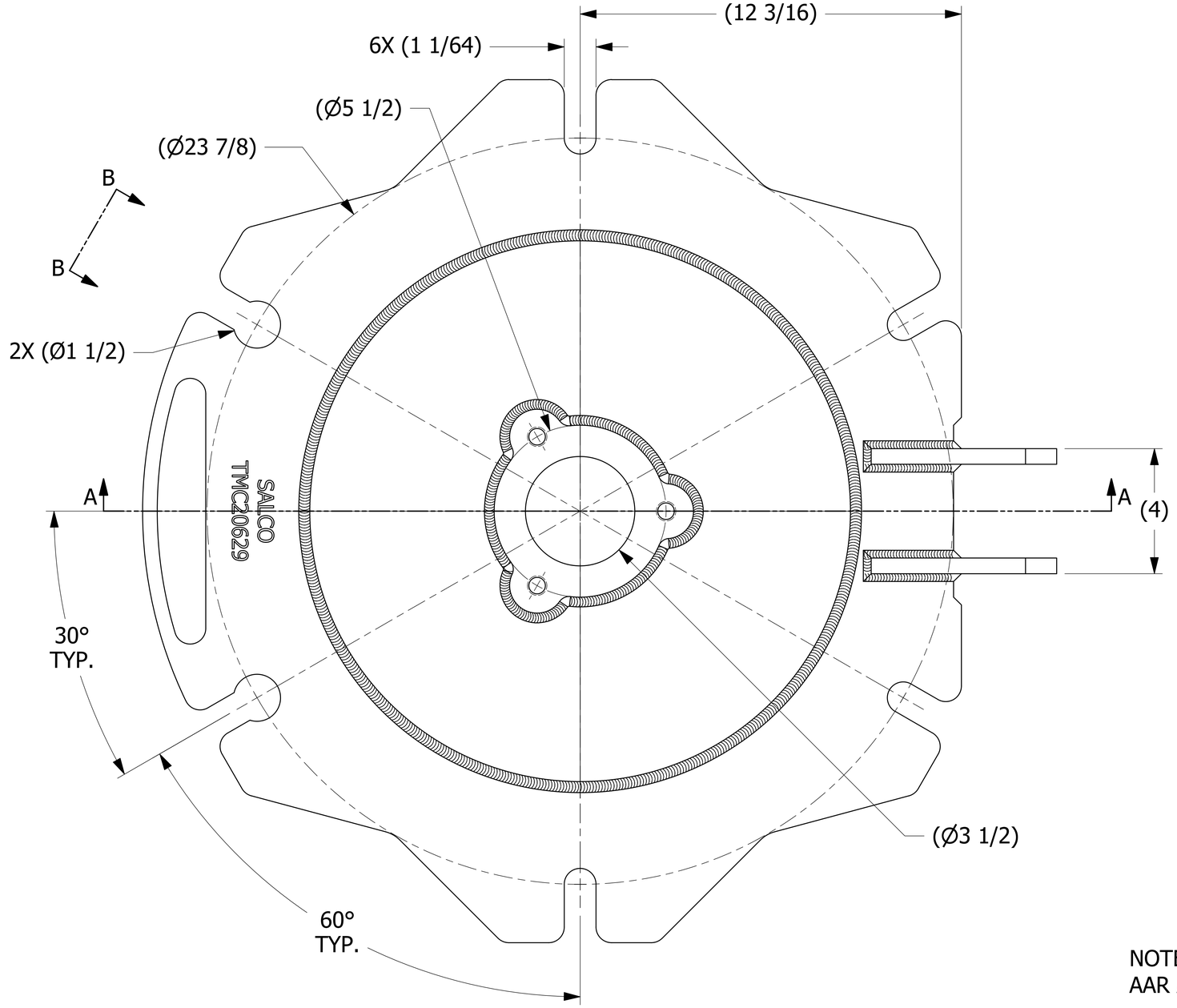

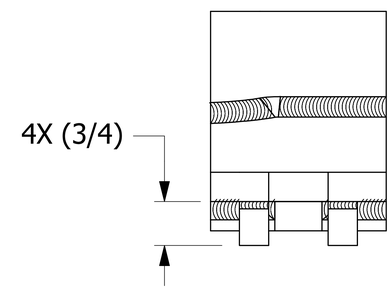

VIEW B-B
SCALE 1 : 1

NOTE:
AAR APPROVAL # E-182114.

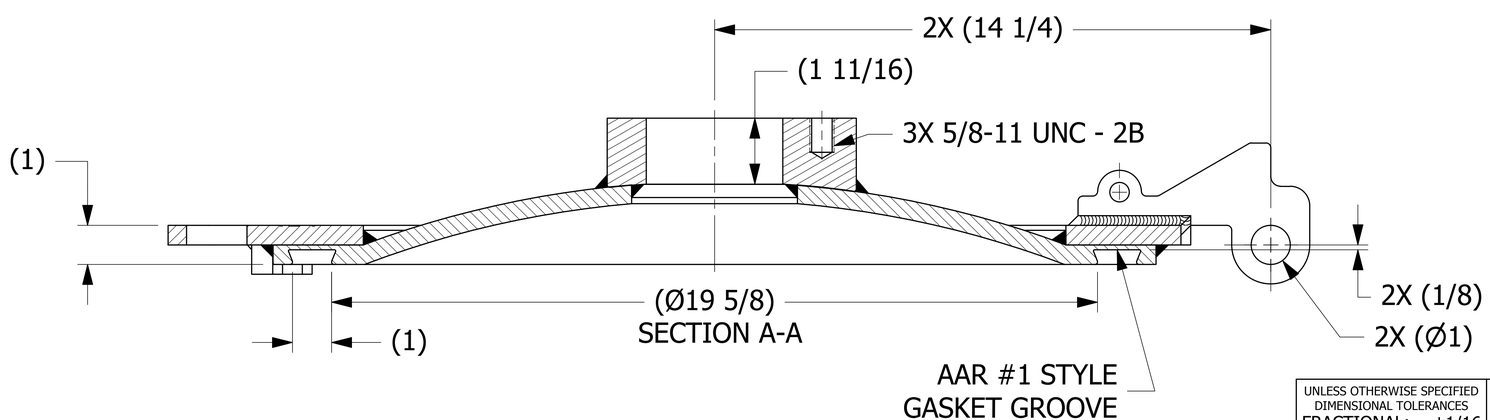

REV	BY	DATE	DESCRIPTION
I	WEB	4-4-19	REMOVED QAP4A-1 NOTE; Q-2.15.7 WAS QAP4C-1; D-008 WAS DSS 12; ADDED D-005 NOTE; AAR # WAS E-089005
H	RJP	11-22-17	HINGE WELD WAS 3/8"; ADDED (1 11/16) & NOTE 6; ADDED "SALCO" TO ENGRAVING
G	JG	5-9-17	TMCDR20629 WAS TMCR206C1 & TMCDQI20MF, A44194 WAS A29293; UPDATED NOTES, VIEWS, DIMS
F	JG	8-5-15	REPLACED TMCHS4TR W/ B40713
E	TAJ	9/20/12	ADDED NOTE #5 & HEAT/LOT NOTE
D	CHL	11-1-10	ADDED VIEW D & DIM 3/4" TO A29293
C	CHL	11-1-10	UPDATED NOTES, REPLACED A14392 W/A29293, UPDATEDWELD SYMBOL, ADDED PART NUMBER TO RING SURFACE
B	CHL	5-27-08	UPDATED NOTES & ADDED VIEW C
A	CHL	4-27-04	NEW PART ADDED TO SYSTEM

UNLESS OTHERWISE SPECIFIED DIMENSIONAL TOLERANCES
FRACTIONAL: ±1/16
X.XX: ±.03
X.XXX: ±.015
ANGULAR: ±1°
DEBURR ALL SHARP EDGES. ALL MACHINED SURFACES TO HAVE A 125 RMS FINISH UNLESS NOTED OTHERWISE.
THIRD ANGLE PROJECTION

DRAWN BY:	CHL
CHECKED BY:	ACC
PROTOTYPE BY:	CHL
PROTOTYPE DATE:	3/19/2004
APPROVED FOR PRODUCTION BY:	ACC
PRODUCTION DATE:	4/27/2004

SALCO PRODUCTS, INC.

PART NAME: MANWAY COVER 20" 6-BOLT

MATERIAL: CS/316L SS

PROJECT #: WAG0120 | SHEET #: 1 OF 1 | SCALE: 2:3

DRAWING #: E19044 | PART #: TMC20629

THIS PRINT, PROPERTY OF SALCO PRODUCTS INC, CONTAINS PROPRIETARY INFORMATION AND MUST NOT BE COPIED, REPRODUCED, OR USED DETRIMENTALLY TO OUR INTEREST.

SALES DRAWING SALES DRAWING SALES DRAWING